REV	DESCRIPTION	DATE	BY
–	–	–	–

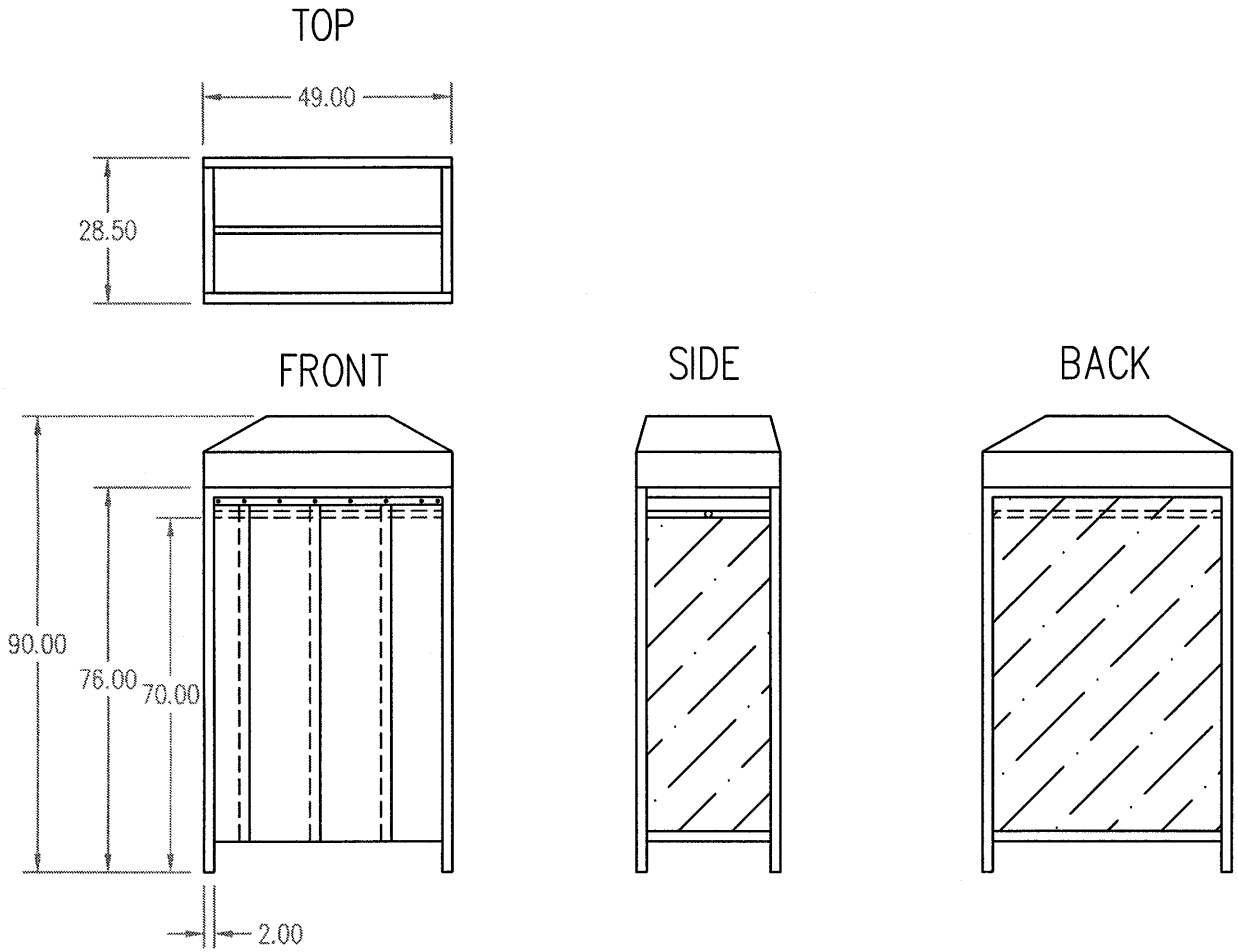

CLASS: 100

THESE DRAWINGS AND SPECIFICATIONS ARE THE EXCLUSIVE PROPERTY OF SERVICOR INC. ISSUED IN STRICT CONFIDENCE AND SHALL NOT, WITHOUT THE PRIOR WRITTEN PERMISSION OF SERVICOR INC., BE REPRODUCE, COPIED OR USED FOR ANY PURPOSE WHATSOEVER EXEPT THE MANUFACTURE OF ARTICLES FOR SERVICOR INC. ALL RIGHTS RESERVED. (650) 591-0900

CUST. –		UNLESS OTHERWISE SPECIFIED UNITS: INCH ANGLE: ± 1 DEG LINEAR: ± 1/32" .XX ± .020 .XXX ± .010	SERVICOR CPI
CODE: –		MAT'L: STRETCHWALL	DESCRIPTION: GARMENT ENCLOSURE
PREPARATION	DATE	HEAT TREAT: –	
APPR'D: –	–	FINISH: –	DWG. No. PRELIMINARY REV. –
DRAWN: WL	4/11/05	–	SIZE: B SCALE: SHEET: 1